POSEIDON
COMMITMENT TO QUALITY AND SERVICE

Product Code: POS-46a

Butler Single Ceramic Sink 530x400x200mm Gloss White

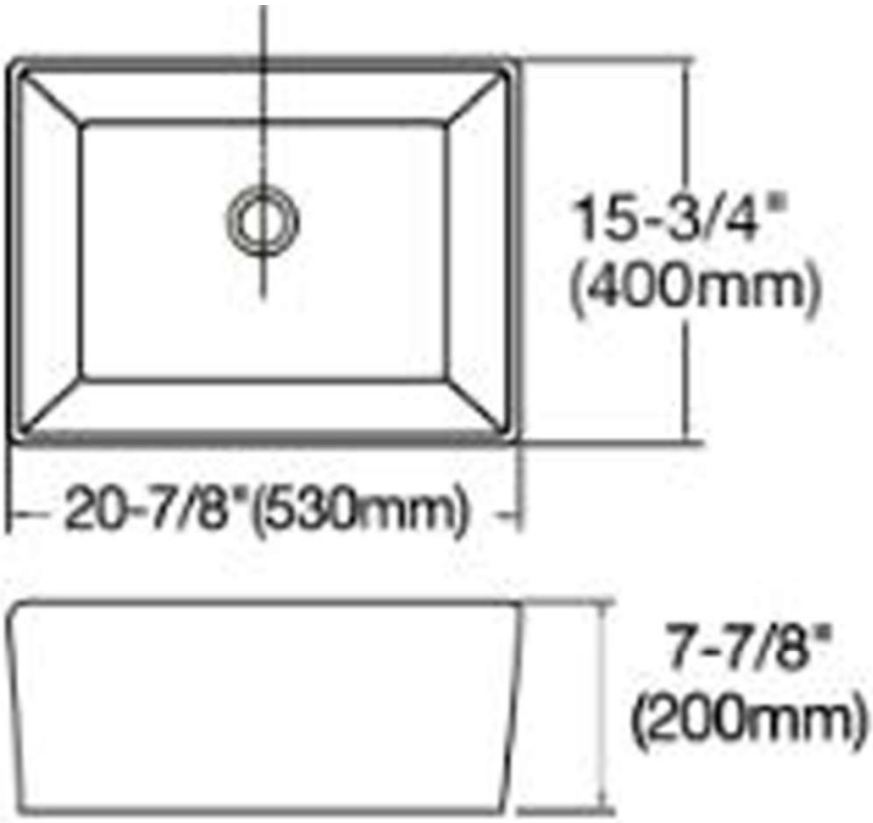

ACS

1300 898 889 www.acsbathrooms.com.au

As part of ACS commitment to quality products. Information provided in this data sheet is representative of the actual productt aavailable at the time of printing. Due to our commitment to continuous product design and development, the designs and specifications depicted are subject to change withoutt notice. Please confirm all particulars with your ACS sales consultant prior to purchase. Each product is covered by a limited warranty. Please see our website for full terms and conditions. This drawing remains the property of ACS and should not be copied or distributed without ACS consent. © 2010 All Dimensions are approximate in mm and are not to scale.