TOTO

Product Code: TOTO-35

TOTO One Piece Toilet + Washlet With Concealed System (Elongate)

With Soft closing seat

Features

- Unique sculpted design, high profile One-Piece Toilet
- CEFIONTECT Technology: super smooth, ion barrier glazing for a clean toilet bowl
- TORNADO FLUSH for powerful flushing effect with less amount of water
- RIMLESS DESIGN, seamless easy-clean bowl design

Specifications

Flush system:	TORNADO FLUSH
Water Use:	4.5L / 3L
Rough-in:	140~275 mm (S-Trap)
Bowl Shape:	Elongated
Water Pressure:	0.07MPa~0.75MPa
Size:	498Wx740Dx670H mm

Parts description

- Elongated One-Piece Toilet
- One piece toilet with Concealed feature, hiding all wiring inside the bowl
- Soft Close Seat & Cover

Colors

White (CEFIONTECT)

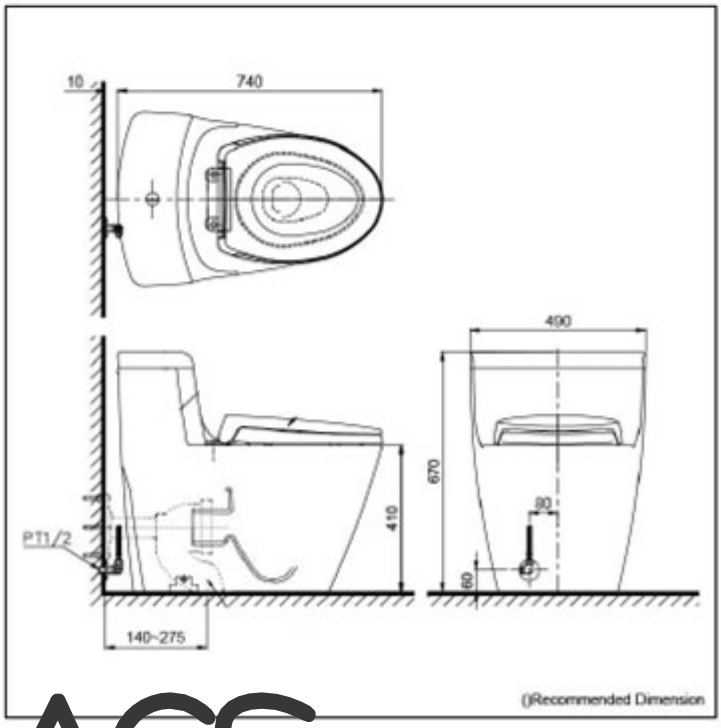

ACS

1300 898 889

www.acsbathrooms.com.au

As part of ACS commitment to quality products. Information provided in this data sheet is representative of the actual productt aavailable at the time of printing. Due to our commitment to continuous product design and development, the designs and specifications depicted are subject to change withoutt notice. Please confirm all particulars with your ACS sales consultant prior to purchase. Each product is covered by a limited warranty. Please see our website for full terms and conditions. This drawing remains the property of ACS and should not be copied or distributed without ACS consent. © 2010 All Dimensions are approximate in mm and are not to scale.